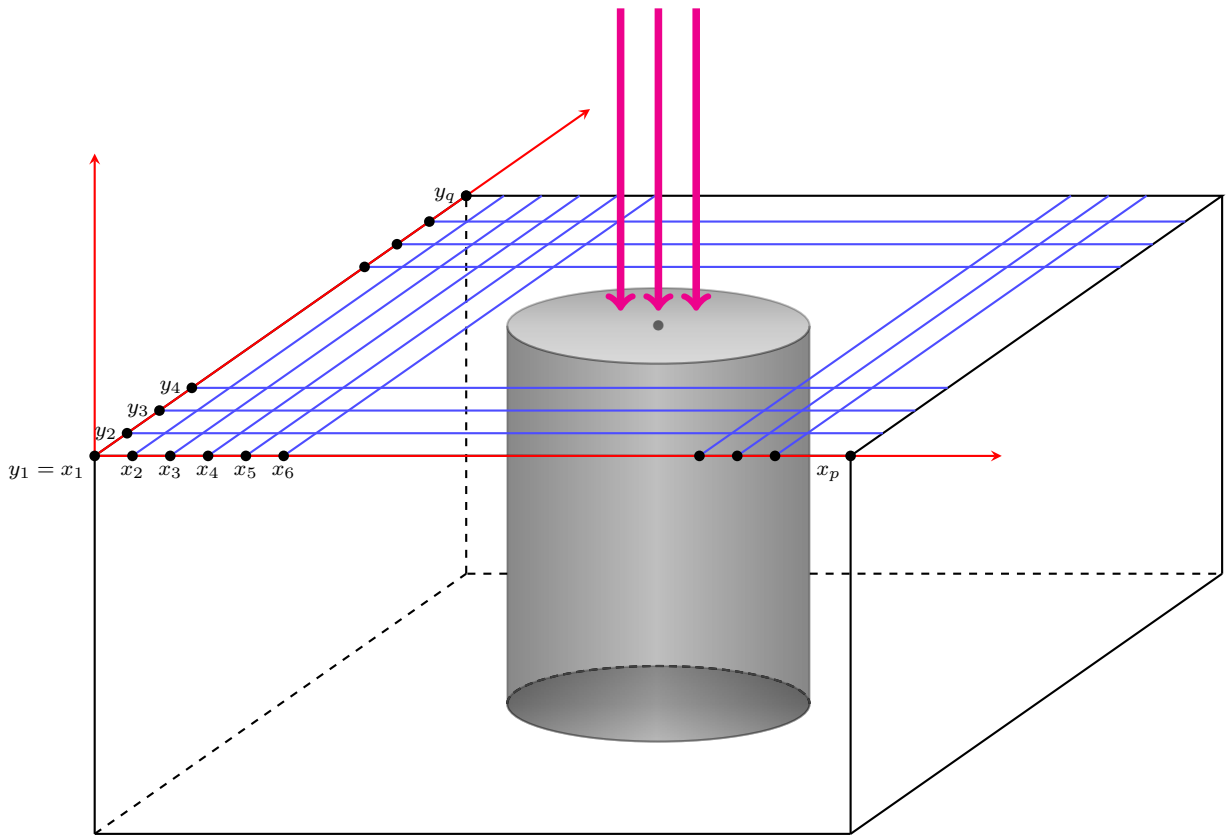
y_q
y_4
y_3
y_2
$y_1 = x_1$
x_2
x_3
x_4
x_5
x_6
x_p